JUMO GmbH & Co. KG
Delivery address: Mackenrodtstraße 14
36039 Fulda, Germany
Postal address: 36035 Fulda, Germany
Phone: +49 661 6003-0
Fax: +49 661 6003-607
Email: mail@jumo.net
Internet: www.jumo.net

JUMO UK LTD
JUMO House
Temple Bank, Riverway
Harlow, Essex, CM20 2DY, UK
Phone: +44 1279 63 55 33
Fax: +44 1279 62 50 29
Email: sales@jumo.co.uk
Internet: www.jumo.co.uk

JUMO Process Control, Inc.
6724 Joy Road
East Syracuse, NY 13057, USA
Phone: +1 315 437 5866
Fax: +1 315 437 5860
Email: info.us@jumo.net
Internet: www.jumousa.com

JUMO MIDAS S07 MA

OEM Pressure Transmitter - Maritime Approved

Areas of application

In the area of shipping and offshore:

- HVAC (Heating, Ventilating, and Air Conditioning)
- Refrigeration
- Motors
- Separator
- Pumps

Type 401021
with M12 plug connector

Special features

- Shipbuilding approval
- 1 to 100 bar relative pressure, up to 25 bar also in absolute pressure
- High process reliability due to a seal-less welded measuring system
- Robust and maintenance-free measurement technology due to extreme overload resistance
- Robust construction for a long service life
- Parts in contact with media are made of stainless steel

Type 401021
with cable socket

Description

The pressure transmitter is suitable for measuring liquids and can be used in harsh conditions.

The used silicon sensor can handle extreme overloading even in the lowest measuring ranges and is capable of handling millions of pressure cycles.

The device structure ensures optimum protection against process medium leakage

JUMO GmbH & Co. KG
Delivery address: Mackenrodtstraße 14
36039 Fulda, Germany
Postal address: 36035 Fulda, Germany
Phone: +49 661 6003-0
Fax: +49 661 6003-607
Email: mail@jumo.net
Internet: www.jumo.net

JUMO UK LTD
JUMO House
Temple Bank, Riverway
Harlow, Essex, CM20 2DY, UK
Phone: +44 1279 63 55 33
Fax: +44 1279 62 50 29
Email: sales@jumo.co.uk
Internet: www.jumo.co.uk

JUMO Process Control, Inc.
6724 Joy Road
East Syracuse, NY 13057, USA
Phone: +1 315 437 5866
Fax: +1 315 437 5860
Email: info.us@jumo.net
Internet: www.jumousa.com

Approval marks and certificates

Certificates for approved device versions are available for download on the manufacturer's website.

Technical data

Electrical safety

Requirements	DIN EN 61010-1 The device must be equipped with an electrical circuit that meets the requirements for "Limited-energy circuits".

Electrical data

Reference conditions	DIN 16086, DIN EN 60770
Voltage supply U_B[a]	
4 to 20 mA, 2-wire	DC 10 to 25 V, rated voltage supply DC 24 V
0 V to 10 V, 3-wire	DC 15 to 25 V, rated voltage supply DC 24 V
1 V to 5 V, 3-wire	DC 10 to 25 V, rated voltage supply DC 24 V
1 V to 6 V, 3-wire	DC 10 to 25 V, rated voltage supply DC 24 V
Current consumption	≤ 25 mA
Reverse voltage protection	Yes
Electrical circuit	SELV

[a] Residual ripple: the voltage peaks must not exceed or fall below the specified voltage supply values!

JUMO GmbH & Co. KG
Delivery address: Mackenrodtstraße 14
36039 Fulda, Germany
Postal address: 36035 Fulda, Germany
Phone: +49 661 6003-0
Fax: +49 661 6003-607
Email: mail@jumo.net
Internet: www.jumo.net

JUMO UK LTD
JUMO House
Temple Bank, Riverway
Harlow, Essex, CM20 2DY, UK
Phone: +44 1279 63 55 33
Fax: +44 1279 62 50 29
Email: sales@jumo.co.uk
Internet: www.jumo.co.uk

JUMO Process Control, Inc.
6724 Joy Road
East Syracuse, NY 13057, USA
Phone: +1 315 437 5866
Fax: +1 315 437 5860
Email: info.us@jumo.net
Internet: www.jumousa.com

Inputs

Measuring range and accuracy

Measuring range bar	Linearity[a] % MSP[f]	Accuracy at 20 °C[d] % MSP	 -20 C to +100 °C[e] % MSP	Long-term stability[b] % MSP per year	Overload capacity[c] bar	Burst pressure bar
0 bar to 1 bar relative/absolute pressure	0.3	0.6	1.5	≤ 0.2	4	6
0 bar to 1.6 bar relative/absolute pressure	0.25	0.5	1.4		6	10
0 bar to 2.5 bar relative/absolute pressure	0.25	0.5	1.3		10	15
0 bar to 4 bar relative/absolute pressure	0.25	0.5	1.2		16	24
0 bar to 6 bar relative/absolute pressure	0.25	0.5	1.2		24	36
0 bar to 10 bar relative/absolute pressure	0.25	0.5	1.0		40	60
0 bar to 16 bar relative/absolute pressure	0.2	0.5	1.0		60	100
0 bar to 25 bar relative/absolute pressure	0.2	0.5	1.0		100	150
0 bar to 40 bar relative pressure	0.2	0.5	1.0		100	150
0 bar to 60 bar relative pressure	0.2	0.5	1.0		180	250
0 bar to 100 bar relative pressure	0.2	0.5	1.0		180	250
-1 to 0 bar relative pressure	0.3	0.6	1.5		4	6
-1 bar to +0.6 bar relative pressure	0.3	0.6	1.5		6	10
-1 bar to +1.5 bar relative pressure	0.3	0.6	1.4		10	15
-1 bar to +3 bar relative pressure	0.3	0.5	1.3		16	24
-1 bar to +5 bar relative pressure	0.25	0.5	1.3		24	36
-1 bar to +9 bar relative pressure	0.25	0.5	1.2		40	60
-1 bar to +15 bar relative pressure	0.25	0.5	1.0		60	100
-1 bar to +24 bar relative pressure	0.2	0.5	1.0		100	150

[a] Linearity according to limit point setting
[b] Reference conditions EN 61298-1
[c] All pressure transmitters are vacuum-proof.
[d] Includes: linearity, hysteresis, repeatability, deviation of measuring range initial value and measuring range end value
[e] Includes: linearity, hysteresis, repeatability, deviation of measuring range initial value and measuring range end value, thermal effect on measuring range start and measuring span
[f] MSP = measuring span

Outputs

Analog output	
Current	4 to 20 mA, 2-wire
Voltage	0 V to 10 V, 3-wire
	1 V to 5 V, 3-wire
	1 V to 6 V, 3-wire
Step response t_{90}	≤ 5 ms
Burden	
Current	
4 to 20 mA, 2-wire	$R_L \leq (U_B - 8\ V) \div 0.02\ A\ (\Omega)$
Voltage	
0 V to 10 V, 3-wire	$R_L \geq 10\ k\Omega$
1 V to 5 V, 3-wire	$R_L \geq 10\ k\Omega$
1 V to 6 V, 3-wire	$R_L \geq 10\ k\Omega$

JUMO GmbH & Co. KG
Delivery address: Mackenrodtstraße 14
36039 Fulda, Germany
Postal address: 36035 Fulda, Germany
Phone: +49 661 6003-0
Fax: +49 661 6003-607
Email: mail@jumo.net
Internet: www.jumo.net

JUMO UK LTD
JUMO House
Temple Bank, Riverway
Harlow, Essex, CM20 2DY, UK
Phone: +44 1279 63 55 33
Fax: +44 1279 62 50 29
Email: sales@jumo.co.uk
Internet: www.jumo.co.uk

JUMO Process Control, Inc.
6724 Joy Road
East Syracuse, NY 13057, USA
Phone: +1 315 437 5866
Fax: +1 315 437 5860
Email: info.us@jumo.net
Internet: www.jumousa.com

Environmental influences

Admissible temperatures	
Medium temperature	
Attached cable	-40 to +125 °C
M12 Plug connector	-40 to +125 °C
Line socket	-40 to +125 °C
Ambient temperature	
Attached cable	-40 to +100 °C
M12 Plug connector	-40 to +125 °C
Line socket	-40 to +125 °C
Storage temperature	
Attached cable	-40 to +100 °C
M12 Plug connector	-40 to +125 °C
Line socket	-40 to +125 °C
Admissible humidity	
Operation	100 % rel. humidity including condensation on the device outer case
Storage	90 % rel. humidity without condensation
Admissible mechanical load	DIN IEC 60068-2-6, DIN IEC 60068-2-27
Vibration resistance	20 g at 10 to 2000 Hz
Shock resistance	50 g for 11 ms, 100 g for 1 ms
Electromagnetic compatibility (EMC)	DIN EN 61326-2-3:2022
Interference emission	Class B[a]
Interference immunity	Industrial requirement
Protection type	DIN EN 60529
Attached cable	IP66 (relative pressure measuring range), IP67 (absolute pressure measuring range)
M12 Plug connector[b]	IP66
Plug connector DIN EN 175301-803	IP30
Line socket[c]	IP65

[a] The product is suitable for industrial use as well as for households and small businesses.
[b] The protection type is only achieved with a suitable mounted counter piece.
[c] Connecting cable diameter: minimum 6 mm, maximum 8 mm.

JUMO GmbH & Co. KG
Delivery address: Mackenrodtstraße 14
36039 Fulda, Germany
Postal address: 36035 Fulda, Germany
Phone: +49 661 6003-0
Fax: +49 661 6003-607
Email: mail@jumo.net
Internet: www.jumo.net

JUMO UK LTD
JUMO House
Temple Bank, Riverway
Harlow, Essex, CM20 2DY, UK
Phone: +44 1279 63 55 33
Fax: +44 1279 62 50 29
Email: sales@jumo.co.uk
Internet: www.jumo.co.uk

JUMO Process Control, Inc.
6724 Joy Road
East Syracuse, NY 13057, USA
Phone: +1 315 437 5866
Fax: +1 315 437 5860
Email: info.us@jumo.net
Internet: www.jumousa.com

Mechanical features

Materials

Sensor	Silicon sensor with stainless steel separating membrane
Pressure transfer medium	Synthetic oil
Process connection	Stainless steel 304[a]
Membrane	Stainless steel 316 L
Housing	Stainless steel 304
Attached cable	PBT-GF30, PVC, PE
M12 plug connector	PBT-GF30, stainless steel 303
Plug connector DIN EN 175301-803	PBT-GF30
Cable socket	PBT-GF30, PA, silicone

[a] Pressure transmitters with process connection 521 are supplied with an FPM seal. Ensure the medium durability of the seal material!

Device

Weight	80 g with process connection G 1/4

Sensor

Admissible load changes	> 10 million
Mounting position	Any
Calibration position	Device stands upright, process connection at the bottom

JUMO GmbH & Co. KG
Delivery address: Mackenrodtstraße 14
36039 Fulda, Germany
Postal address: 36035 Fulda, Germany
Phone: +49 661 6003-0
Fax: +49 661 6003-607
Email: mail@jumo.net
Internet: www.jumo.net

JUMO UK LTD
JUMO House
Temple Bank, Riverway
Harlow, Essex, CM20 2DY, UK
Phone: +44 1279 63 55 33
Fax: +44 1279 62 50 29
Email: sales@jumo.co.uk
Internet: www.jumo.co.uk

JUMO Process Control, Inc.
6724 Joy Road
East Syracuse, NY 13057, USA
Phone: +1 315 437 5866
Fax: +1 315 437 5860
Email: info.us@jumo.net
Internet: www.jumousa.com

Dimensions

Electrical connection

Attached cable

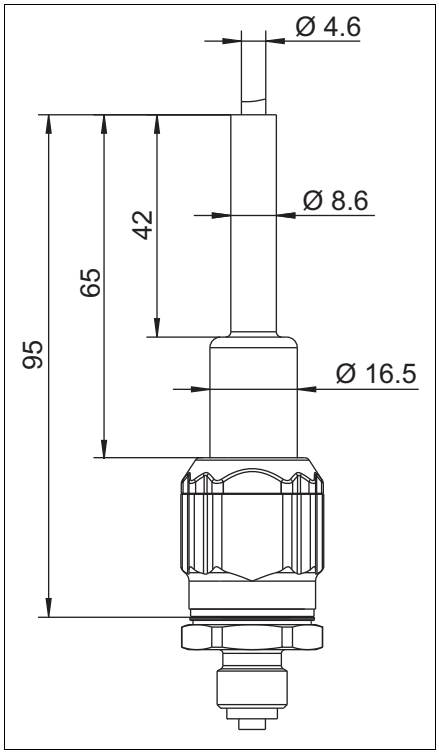

M12 Plug connector

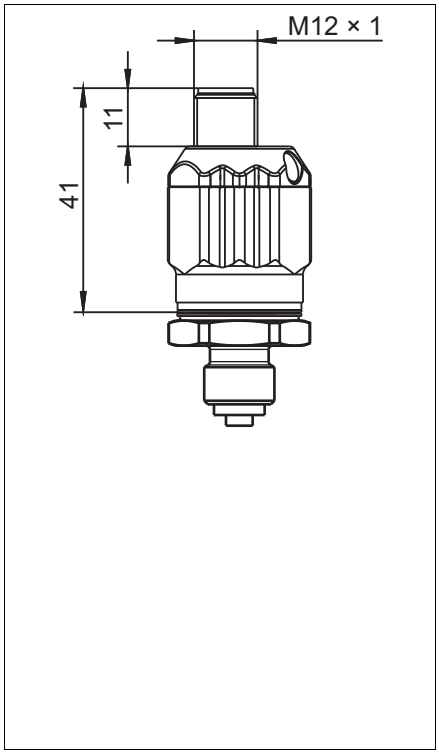

Plug connector DIN EN 175301-803

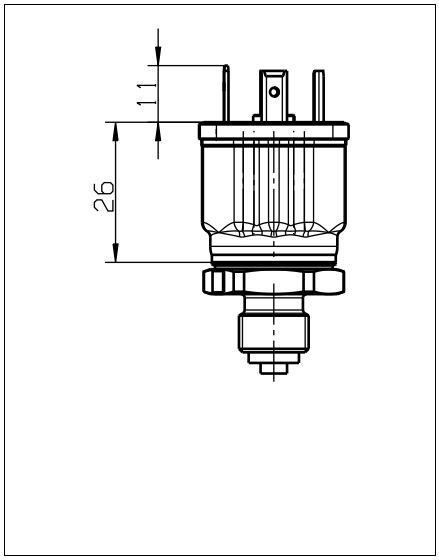

Line socket

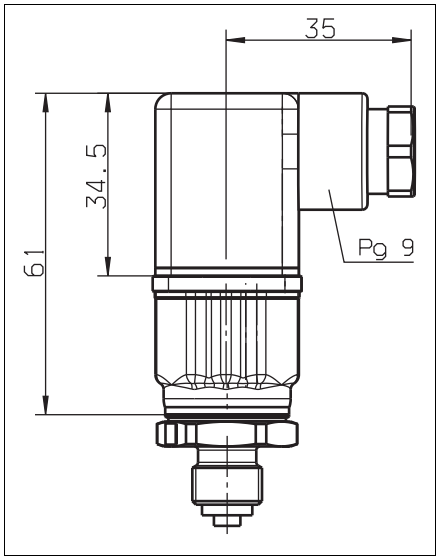

JUMO GmbH & Co. KG
Delivery address: Mackenrodtstraße 14
36039 Fulda, Germany
Postal address: 36035 Fulda, Germany
Phone: +49 661 6003-0
Fax: +49 661 6003-607
Email: mail@jumo.net
Internet: www.jumo.net

JUMO UK LTD
JUMO House
Temple Bank, Riverway
Harlow, Essex, CM20 2DY, UK
Phone: +44 1279 63 55 33
Fax: +44 1279 62 50 29
Email: sales@jumo.co.uk
Internet: www.jumo.co.uk

JUMO Process Control, Inc.
6724 Joy Road
East Syracuse, NY 13057, USA
Phone: +1 315 437 5866
Fax: +1 315 437 5860
Email: info.us@jumo.net
Internet: www.jumousa.com

Process connections

G 1/8 DIN EN 837

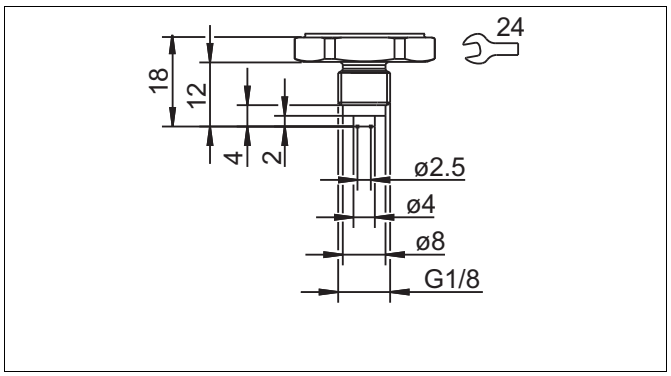

G 1/4 DIN EN 837

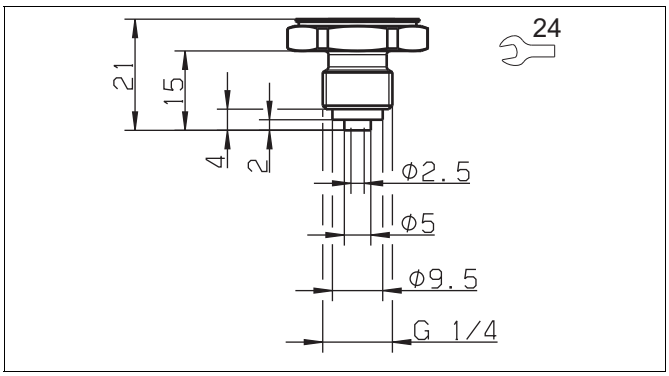

G 3/8 DIN EN 837

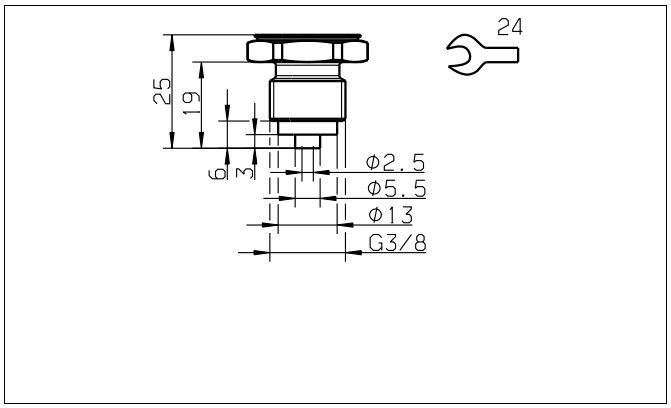

G 1/2 DIN EN 837

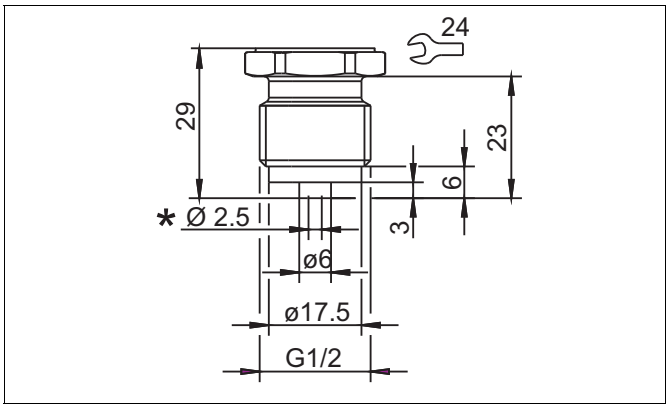

* Extra code 630 pressure channel Ø 12 mm

1/4" – 18 NPT DIN EN 837

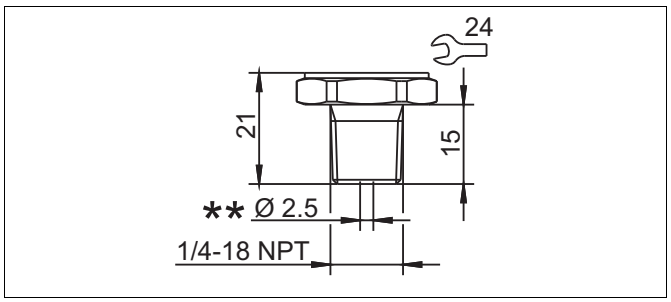

** Extra code 630 pressure channel Ø 8 mm

G 1/4 DIN 3852-11

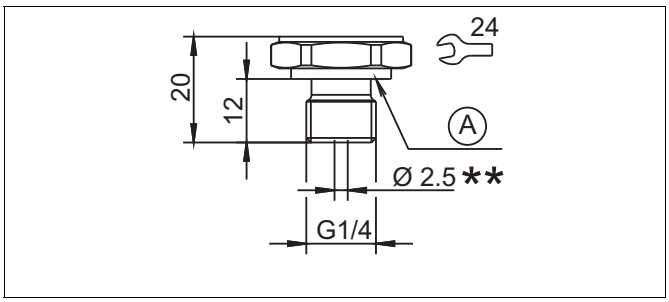

** Extra code 630 pressure channel Ø 8 mm

A Profile seal G 1/4

JUMO GmbH & Co. KG
Delivery address: Mackenrodtstraße 14
36039 Fulda, Germany
Postal address: 36035 Fulda, Germany
Phone: +49 661 6003-0
Fax: +49 661 6003-607
Email: mail@jumo.net
Internet: www.jumo.net

JUMO UK LTD
JUMO House
Temple Bank, Riverway
Harlow, Essex, CM20 2DY, UK
Phone: +44 1279 63 55 33
Fax: +44 1279 62 50 29
Email: sales@jumo.co.uk
Internet: www.jumo.co.uk

JUMO Process Control, Inc.
6724 Joy Road
East Syracuse, NY 13057, USA
Phone: +1 315 437 5866
Fax: +1 315 437 5860
Email: info.us@jumo.net
Internet: www.jumousa.com

7/16" – 20 UNF

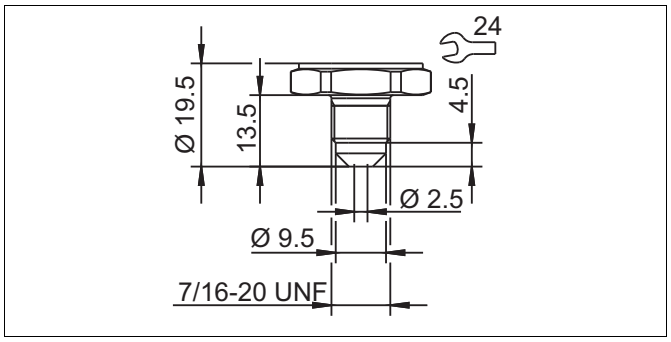

7/16" – 20 UNF interior with walve core handle

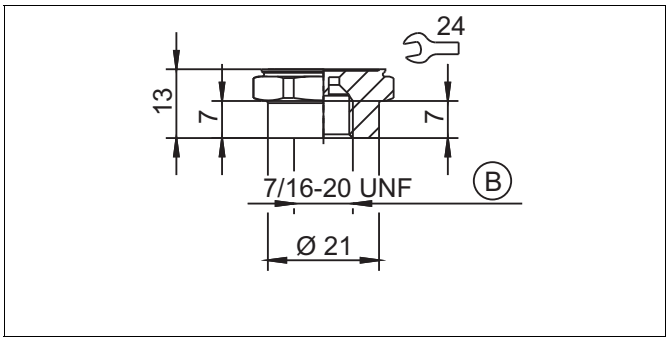

B Walve core handle

JUMO GmbH & Co. KG
Delivery address: Mackenrodtstraße 14
36039 Fulda, Germany
Postal address: 36035 Fulda, Germany
Phone: +49 661 6003-0
Fax: +49 661 6003-607
Email: mail@jumo.net
Internet: www.jumo.net

JUMO UK LTD
JUMO House
Temple Bank, Riverway
Harlow, Essex, CM20 2DY, UK
Phone: +44 1279 63 55 33
Fax: +44 1279 62 50 29
Email: sales@jumo.co.uk
Internet: www.jumo.co.uk

JUMO Process Control, Inc.
6724 Joy Road
East Syracuse, NY 13057, USA
Phone: +1 315 437 5866
Fax: +1 315 437 5860
Email: info.us@jumo.net
Internet: www.jumousa.com

Connection elements

The connection diagram in the data sheet provides information on product selection.

For the electrical connection, only use the installation instructions or the operating manual.

	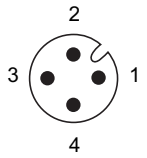	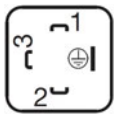
Attached cable	M12 Plug connector	Plug connector DIN EN 175301-803, Line socket

Terminal assignment

Designation	Description	Assignment		
Output 4 to 20 mA, 2-wire Voltage supply DC 10 to 25 V	U_B/S+ 0 V/S-	WH (white) BN (brown)	1 3	1 2
Output 0 to 10 V, 3-wire Voltage supply DC 15 to 25 V	U_B 0 V/S- S+	WH (white) BN (brown) GN (green)	1 2 3	1 2 3
Output 1 to 5 V, 3-wire Output 1 to 6 V, 3-wire Voltage supply DC 10 to 25 V	U_B 0 V/S- S+	WH (white) BN (brown) GN (green)	1 2 3	1 2 3
Functional bonding conductor FB[a]	⏚	–	4	⏚

[a] The pressure transmitter has to be connected to the potential equalization system of the plant via the electrical connection or process connection.

JUMO GmbH & Co. KG
Delivery address: Mackenrodtstraße 14
36039 Fulda, Germany
Postal address: 36035 Fulda, Germany
Phone: +49 661 6003-0
Fax: +49 661 6003-607
Email: mail@jumo.net
Internet: www.jumo.net

JUMO UK LTD
JUMO House
Temple Bank, Riverway
Harlow, Essex, CM20 2DY, UK
Phone: +44 1279 63 55 33
Fax: +44 1279 62 50 29
Email: sales@jumo.co.uk
Internet: www.jumo.co.uk

JUMO Process Control, Inc.
6724 Joy Road
East Syracuse, NY 13057, USA
Phone: +1 315 437 5866
Fax: +1 315 437 5860
Email: info.us@jumo.net
Internet: www.jumousa.com

Order details

	(1)	**Basic type**
401021		JUMO MIDAS S07 MA – OEM Pressure Transmitter – Maritime Approved
	(2)	**Basic type extension**
000		None
999		Special version
	(3)	**Input**
454		0 to 1 bar relative pressure
455		0 to 1.6 bar relative pressure
456		0 to 2.5 bar relative pressure
457		0 to 4 bar relative pressure
458		0 to 6 bar relative pressure
459		0 to 10 bar relative pressure
460		0 to 16 bar relative pressure
461		0 to 25 bar relative pressure
462		0 to 40 bar relative pressure
463		0 to 60 bar relative pressure
464		0 to 100 bar relative pressure
478		-1 to 0 bar relative pressure
479		-1 to +0.6 bar relative pressure
480		-1 to +1.5 bar relative pressure
481		-1 to +3 bar relative pressure
482		-1 to +5 bar relative pressure
483		-1 to +9 bar relative pressure
484		-1 to +15 bar relative pressure
485		-1 to +24 bar relative pressure
488		0 to 1 bar absolute pressure
489		0 to 1.6 bar absolute pressure
490		0 to 2.5 bar absolute pressure
491		0 to 4 bar absolute pressure
492		0 to 6 bar absolute pressure
493		0 to 10 bar absolute pressure
494		0 to 16 bar absolute pressure
495		0 to 25 bar absolute pressure
998		Special measuring range for absolute pressure
999		Special measuring range for relative pressure
	(4)	**Output**
405		4 to 20 mA, 2-wire
415		0 V to 10 V, 3-wire
418		1 V to 5 V, 3-wire
420		1 V to 6 V, 3-wire
	(5)	**Process connection**
501		G 1/8 DIN EN 837
502		G 1/4 DIN EN 837
503		G 3/8 DIN EN 837
504		G 1/2 DIN EN 837
511		1/4" – 18 NPT DIN EN 837
521		G 1/4 DIN 3852-11
562		7/16" – 20 UNF
563		7/16" – 20 UNF interior, with valve core handle

JUMO GmbH & Co. KG
Delivery address: Mackenrodtstraße 14
36039 Fulda, Germany
Postal address: 36035 Fulda, Germany
Phone: +49 661 6003-0
Fax: +49 661 6003-607
Email: mail@jumo.net
Internet: www.jumo.net

JUMO UK LTD
JUMO House
Temple Bank, Riverway
Harlow, Essex, CM20 2DY, UK
Phone: +44 1279 63 55 33
Fax: +44 1279 62 50 29
Email: sales@jumo.co.uk
Internet: www.jumo.co.uk

JUMO Process Control, Inc.
6724 Joy Road
East Syracuse, NY 13057, USA
Phone: +1 315 437 5866
Fax: +1 315 437 5860
Email: info.us@jumo.net
Internet: www.jumousa.com

	(6)	**Process connection material**
20		CrNi (stainless steel)
	(7)	**Electrical connection**
11		Attached cable[a]
36		M12 plug connector
60		Plug connector DIN EN 175301-803, Form A (without cable socket)
61		Cable socket DIN EN 175301-803, Form A
	(8)	**Extra codes**
000		None
061		UL approval
462		Inverted output signal
591		Choke in the pressure channel
624		Oil and grease free
630		Enlarged pressure channel[b]
876		Test report

[a] The standard cable length is 2 m. Further lengths up to a max. of 5 m are available upon request.

[b] An enlarged pressure channel is only available in conjunction with process connections 504, 511 and 521.

	(1)		(2)		(3)		(4)		(5)		(6)		(7)		(8)	
Order code		/		-		-		-		-		-		/		, ...[a]
Order example	401021	/	000	-	460	-	412	-	504	-	20	-	36	/	000	

[a] List extra codes in sequence, separated by commas.